BODY, FRONT CLOSEOFF AND FLOOR PANELS - Z26SPD92AN/AH/BN/BH (C750172)

2026 RZR - RZR PRO S ULTIMATE (R01) - Z26SPD92AN/AH/BN/BH

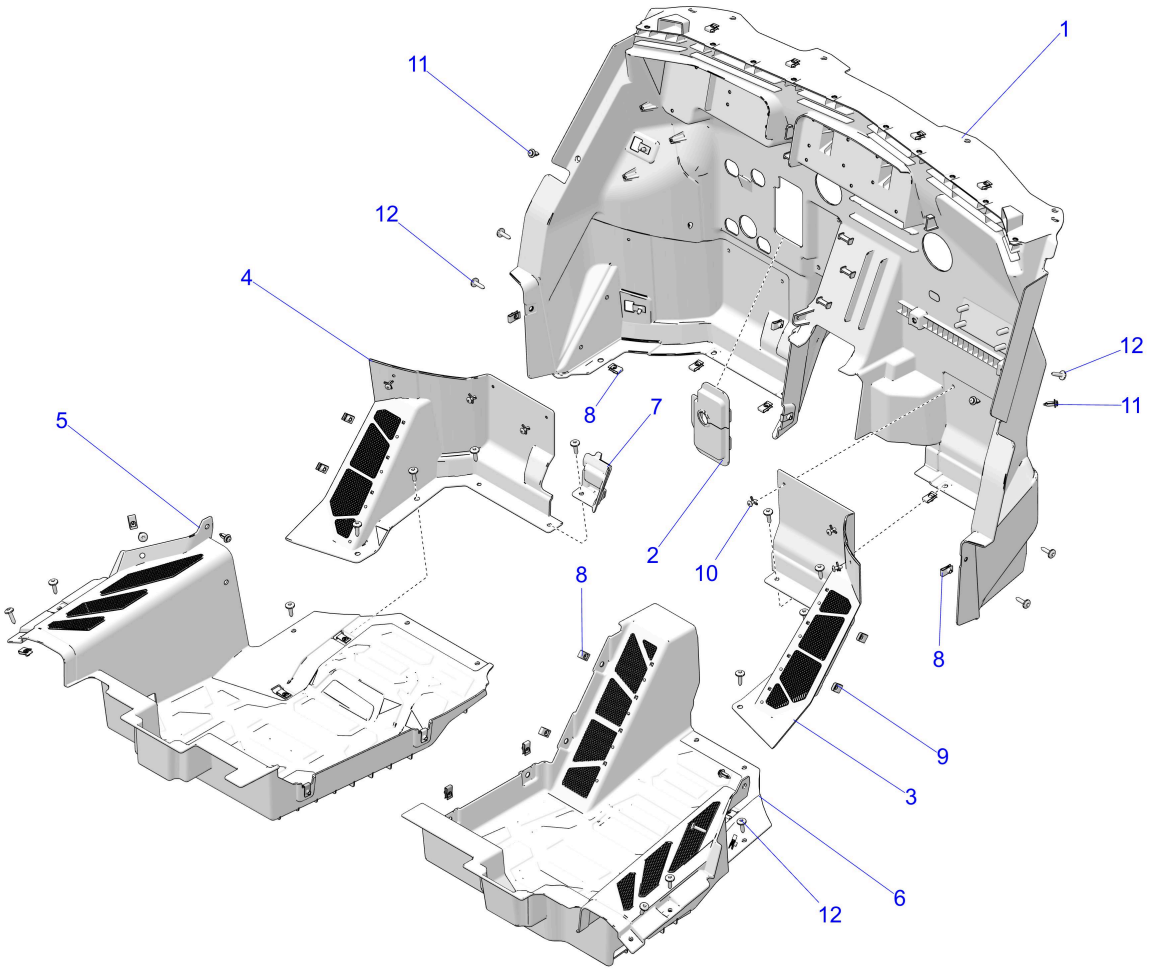

© 2023 Polaris Industries Inc. C750172

Reference #	*Part#*	*Description*	*Quantity*
1	2637789-070	ASM-FLOOR,MAIN,ROUTER,BLK [INCL. QTY 18 OF 8]	1
2	5417242	BOOT-STEERING	1
3	5455364-070	PANEL-FOOTREST,PASSENGER,BLK [INCL. QTY 2 OF 9]	1
4	5456669-070	PANEL-FOOTREST,DRIVE,ROUTER,BK [INCL. QTY 2 OF 9]	1
5	2639658-070	ASM-FLOOR,FRONT,LH,BLK [INCL. QTY 5 OF 8]	1
6	2639659-070	ASM-FLOOR,FRONT,RH,BLK [INCL. QTY 7 OF 8]	1
7	5458185	PLUG-FLOOR	1
8	7081305	CLIP-U SPEED NUT	30
9	7547674	NUT-M6-1.0, U-TYPE (2.5-3.8)	4
10	7663110	RVT-3/16(.275-.433)AL-VGRIP-B	6
11	7661855	RIVET-TUFLOK,.315-.325X.787	AR
12	7519650	SCR-TXTH-M6X1.0X25 ZFB	AR

Copyright 1996-2026 Polaris Industries U.S.A All rights reserved.